2D-DRAW: 2022/12/7 12:56:26 F:\SANNI SJWJ CAI\SMA射频连接器设计图20221030.drg 3D-MODEL: 2022/12/7 12:56:26

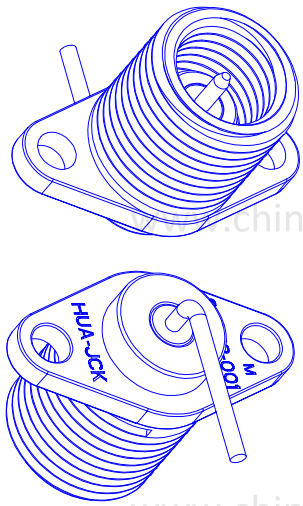

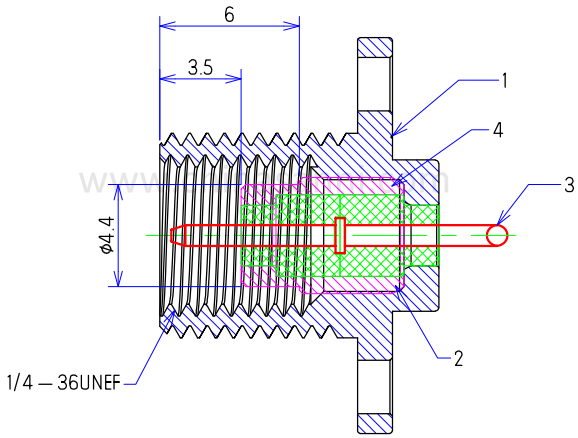

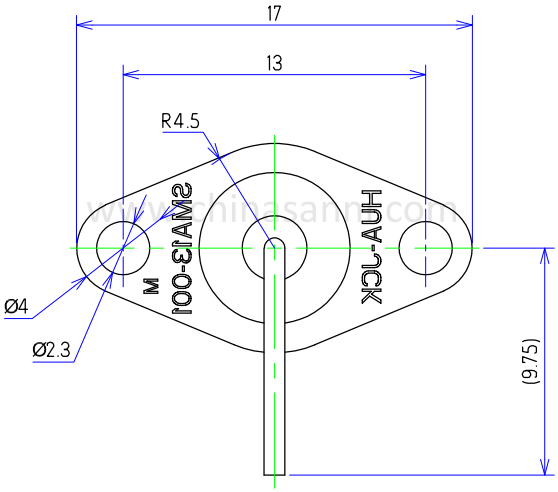

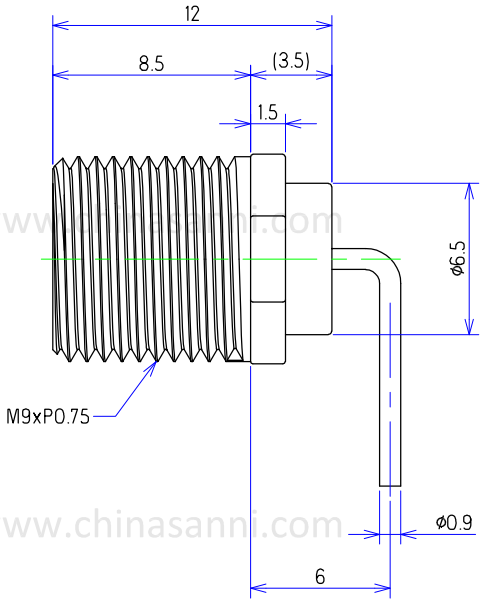

Specifications:

1. Electrical characteristics:
   1-1. Rating: 30V/DC.1.0A.
   1-2. Contact resistance: 10mΩ Max.
   1-3. Insulation resistance: 100MΩ Min.
   1-4. Dielectric withtanding voltage: 500V AC RMS After 1 Minute.
2. Mechanical characteristics:
   2-1. Inner Screw force: 60N Max.
   2-2. Outer Screw force: 80N Min.
3. Life test: 1,500 Cycles Min.
4. Environmental:
   4-1: Temperatrue range: -70℃ to +200℃ .
   4-2: Salt spray: 48H.

NO	Description	QTY	Materlar	Color
4	Insulating Sleeve	2	PTFE	White
3	Pin	1	Brass with Gold plating	Golden
2	Inner bushing	1	Brass with Nickel Plating	Silver
1	Bushing	1	Zinc alloy with Nickel Plating	Silver

Material No. | Dispose: | S: | D: | V: | M:6.60g

SYMB	REVISION	DATE	APPROVED
5			
4			
3			
2			
1			

TOL UNLESS OTHERWISE STATED	
BASIC DIMENSION	TOLERANCE
Less than 1.00	±0.010
1.00-less than 10.0	±0.015
10.0-less than 50.0	±0.050
ANGLE	±0.5°

DESIGNED | CHECKED | DRAWING No.

UNIT	Edition
mm	A1.0
SCALE	DRW D
3:1	2022-10/31

SANNI ELECTRONIC TECHNOLOGY

Model No. SMA13—001

Document No. SMA13—001

www.chinasanni.com